ARDUINO

Lec6 (final lecture)

Written by : Mohammad Prince

❑ Introduction

- In this situation , we need to thank you for paying and attention for this course .
- This will be the final lecture , and there will be an file for the projects we have done in this course.
- In this lecture , we will learn Interrupts , some motors .

❑ Interrupts

- What are the interrupts ?? → are actions which cut another action , and after this cutting action has done , the main action will continue again .

- In Arduino , the interrupts are the pins which are marked with (int) , we have 2 interrupts in Arduino .

- Types of interrupts :

  1. Timer → Delay ( ) / Millis ( )
  2. ADC
  3. External interrupts→ we can perform it using switches (we will learn this type only)

  Delay ( ) / Millis ( ) → We won't learn about them , no common applications for them .

- When the timers ends his function if it is delay or millis , it returns a variable (TF = 1) and else , TF = 0 (TF works as flag).
- In ADC , analogRead ( ) returns the no. of level and when it ends its conversion it returns an flag which from it you can know the conversion is done .
- How the interrupts do ?? → you start it in the setup function , and when it change the function of interrupt will be done , to understand follow to the following slide .

```
Void setup( ){
    commands ;
    starting the interrupter(timer or external interrupt or ADC );
}
Void loop( ){
    main commands ;
}
Void ISR( ){
    interrupting commands ;
}
```

Interrupt service routine

The function of the interrupter

→ Such as now , if you are reading these slides (main action) on your device , your device has closed (interrupting action) .

→ How to define an interrupter with its function and the change to do this function ?

```
attachInterrupt(digitalPinToInterrupt(pin of INT), ISR_name , change at which the ISR will be done);
```

❑ Types of changes for interrupters

1. Any change → at any change for switch , the function will be implemented .
2. HIGH → at the high level of pulses , the function will be implemented .
3. LOW → at low level of pulses , the function will be implemented .
4. FALLING → at the falling edge of the pulses , the function will be implemented .
5. RISING → at the rising edge of the pulses , the function will be implemented .

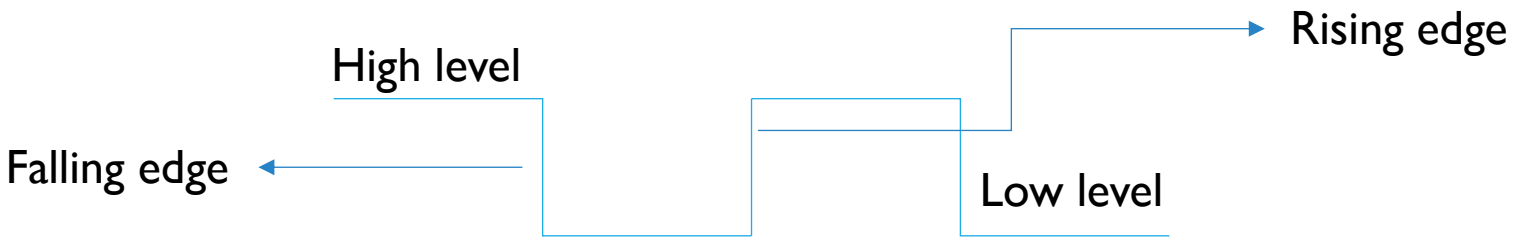

✓ EX :- blink using interrupts ??

```
#define SW 2
#define LED 7
bool flag=true;
void setup() {
  // put your setup code here, to run once:
  pinMode(SW,INPUT);
  pinMode(LED,OUTPUT);
  attachInterrupt(digitalPinToInterrupt(SW),blink,CHANGE);
}

void loop() {
  // put your main code here, to run repeatedly:
  digitalWrite(LED,flag);
}
void blink(){
  flag=!flag;
}
```

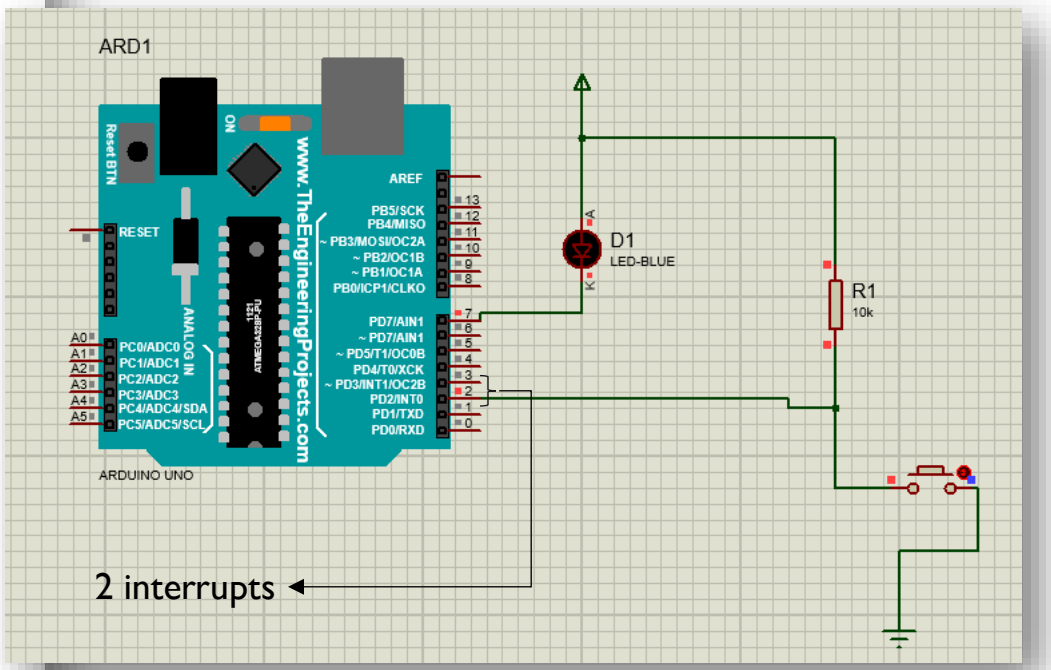

❑Servo Motor

- The motor , we have learnt is a continuous motor (rotates all time) .
- There is another type of motors which is non – continuous as servo motor or step motor .
- To set up it in the Arduino file , you must include the library of (Servo.h) .
- The codes for the motor :
  - ➢ To connect the motor to Arduino → Servo_obj . attach(no. of pin)
  - ➢ Servo_obj . write(req_angle)

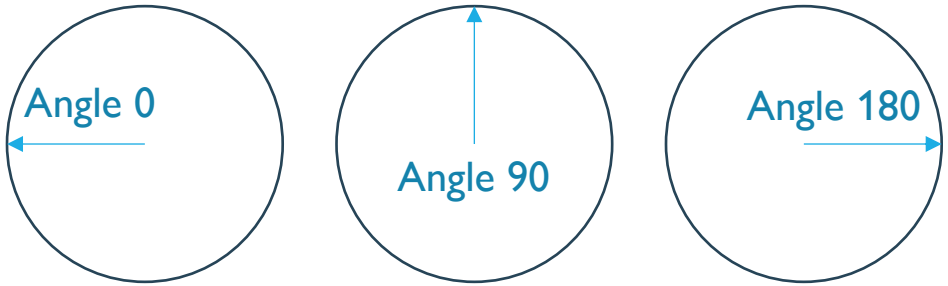

EX :- an simple application for servo motor .

```
#include <Servo.h>
Servo servo1;
#define servo_pin 5

void setup() {
  // put your setup code here, to run once:
  servo1.attach(servo_pin);
}

void loop() {
  // put your main code here, to run repeatedly:
  servo1.write(0);
  delay(1000);
  servo1.write(90);
  delay(2000);
  servo1.write(180);
  delay(1000);

}
```

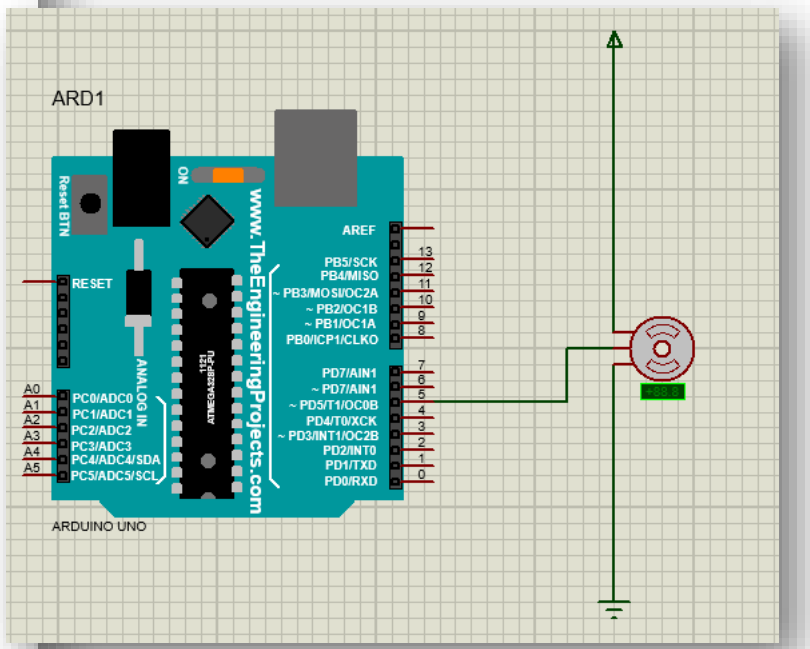

Rotates to angle 0 m wait for 1 second , rotates to position 90 , then wain for 2 sec , then rotates to angle 180 and repeats that .

THANK YOU

FOR PAYING ATTENTION